VK3, VK3V, VK3SV,...

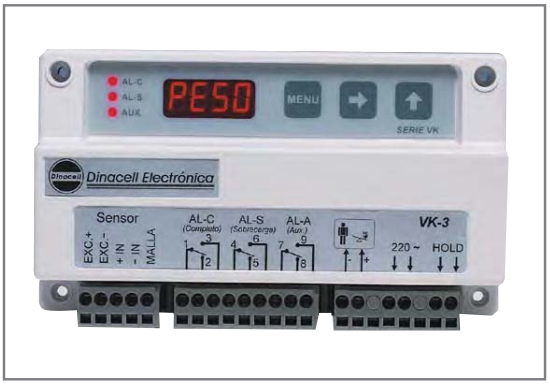

- The VK series stands out for its wide range of models and its great versatility to give solution to all the possible necessities, that acts to the control and load limitation in elevators.
- The VK series takes included a software that depending on the model, it can carry out a functions such as: detection of errors, auto-calibrated (adjusts of the load without necessity of introducing a well-known weight in the cabin), compensation of the weight of the chain, etc....
- Flexibility in the fixation of the unit (rail din or fixed screws).
- Applicable for any measurement system like weighing in cabin, cables, motor bedframe, etc.
- Compact box manufactured in ABS fireproof material.
- Programming for keyboard.
- 4 digits display .
- Cabin display output, inhibition entrance (hold).

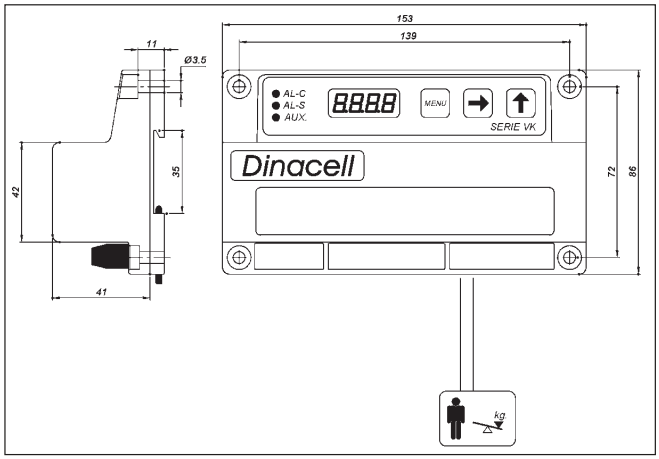

Standard models for elevators

VK-OMEGA

This unit is prepared to be used with the sensor SW-OMEGA.

Their specific software allows:

- To carry out the standard functions of any load weighing system, such as control and limitation of the load (complete, overload etc.).
- To visualize the weight that supports each one of the cables.
- To carry out the adjustment of the force that exercises each one of the cables. In this operation the software will guide us in an automatic way and getting this way a perfect level among them.
- Assigned a value of alarm shot for the imbalance level between the cables, so that once surpassed this value it will emit us an signal alarm.

VK-3

Relay alarm: 3
Output: 1 (cabin display)
Power supply: 230, 115, 48 Vac

VK-3V

Relay alarm: 3
Output: 1 (cabin display), 1 (0-10 V ± 1%)
Power supply: 230, 115, 48 Vac, 24 Vdc

VK-3SV

Relay alarm: 3
Output: 1 (cabin display), unit used for sensor SV
Power supply: 230, 115, 48 Vac

VK-3i

Relay alarm: 3
Output: 1 (cabin display), 1 (4-20 mA ± 1%)
Power supply: 230, 115, 48 Vac, 24 Vdc

VK-OMEGA

Relay of alarm: 3
Output : 1 (Cabin display)
Precision : 0,1%
Power supply: 230 Vac
Communication : RS-485

Electric Characteristic

Relays contact	250V 3A
Interface w/ cabin display	2 threads (w/o polarity)
Temperature range of work	–20 a +70°C
Hold entrance (inhibition)	tension (24Vdc, 24..230 Vac)
Precision in the measure	0.1% F.S.

Load limiter sensor on ropes

DATA SHEET

SWK

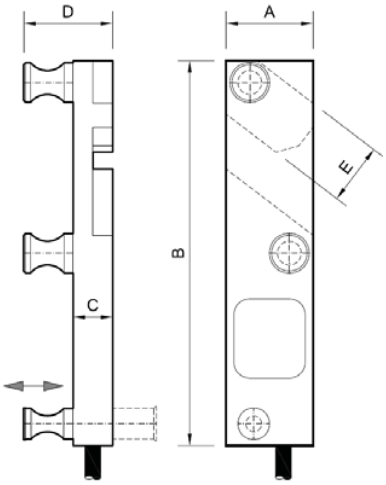

Dimensions in mm

The installation can be performed:

- Standard wrench
- Dinacell installation tool

- Load limiter sensor design for measuring the load on steel ropes that work to traction (elevators, lifts…)

	Ø Rope	4	5	6	6.5	8	9	10	11	12	13	14	15	16
Dimensions (mm.)	Cn (kg)	150	200	250		350	400	450	550	650	800	950	1100	1250
	A	12.5	18	20				22		24		28		
	B	70	80	87				97		107		110		130
	C	8	10									12		
	D	14	18.5			21		22.5		25		30.5		
	E	10	14					15.5		17.5		–		
Nominal load (nL) kg. Depending on Mod.	SWK4	**150**(1)	130(2)											
	SWK5	250(2)	**200**(1)	150(2)										
	SWK6		300(2)	**250**(1)	200(2)									
	SWK6.5			350(2)	**250**(1)	200(2)								
	SWK8				400(2)	**350**(1)	250(2)							
	SWK9					500(2)	**400**(1)	300(2)						
	SWK10						550(2)	**450**(1)	350(2)					
	SWK11							650(2)	**550**(1)	450(2)				
	SWK12								750(2)	**650**(1)	550(2)			
	SWK13									900(2)	**800**(1)	700(2)		
	SWK14										1050(2)	**950**(1)	850(2)	
	SWK15											1200(2)	**1100**(1)	1000(2)
	SWK16												1350(2)	**1250**(1)

(1) Optimal rope Ø
(2) Valid for other Ø

Total load = Nominal load (see table) kg. X number of ropes

Optional USB connector

Wiring diagram

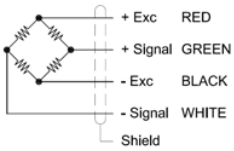

Technical characteristics

Nominal load (nL)	150 …1250 kg	Maximum excitation voltage	12 V.
Sensibility	1,3…2,0 mV/V	Minimum insulation resistance (V.Test = 100V)	4 GΩ
Tolerance adjust on zero	20 % F.S.	Maximum working load	150 % F.S.
Service temperature range	-20 ... 60 ºC	Load limit without loss of characteristics	200 % F.S.
Input resistance	350..400 Ω	Protection class	IP65
Output resistance	350 ± 1.5Ω	Material	Aluminum
Accuracy	0.25 % F.S.	Surface treatment	Anodized

Elevator Systems, Inc. ~ 465 Endo Blvd, Garden City, New York 11530 ~ 516-239-4044 (voice) ~ 516-239-5793 (fax) info@elevatorsystems.com

*Sensors **SWK** and **SWR** installation guide*

Model	SWK	SWR
Ø Rope	NL (kg.)	NL (kg.)
4	150	150
5	200	200
6	250	250
6.5	250	250
8	350	350
9	400	400
10	450	450
11	550	550
12	650	650
13	800	800
14	950	--
15	1100	--
16	1250	--

CONEXIONADO CABLE 4 HILOS
4 WIRES CONNECTIONS

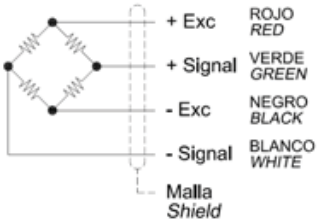

CONEXIONADO USB
USB CONNECTION

El montaje se puede realizar con:
The assembly can be performed with:

- **Llave estándar** para sensores de Ø6 a 11 mm.
- ***Standard Tool*** *for Ø6 to Ø11 mm sensors.*

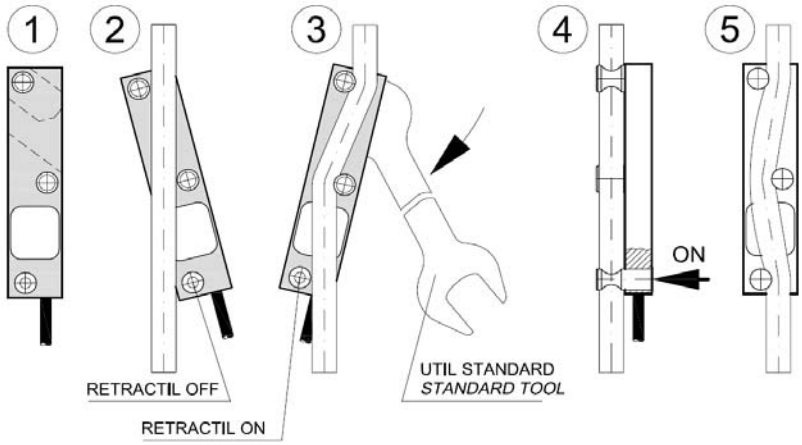

- **Llave especial Dinacell** para sensores de Ø6 a Ø16mm.
- ***Dinacell Tool*** *for Ø6 to Ø16 mm sensors.*

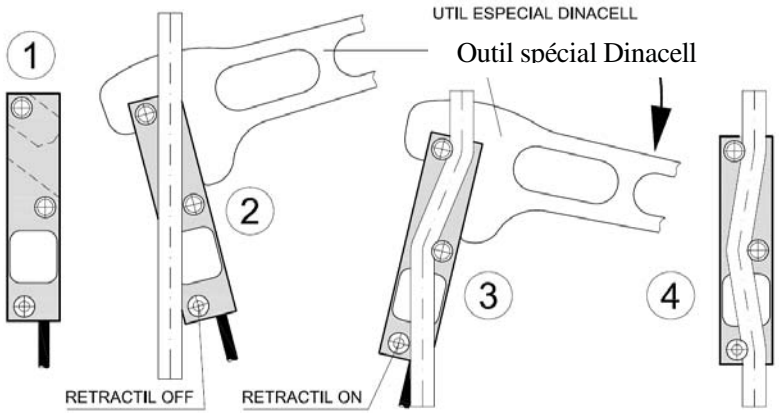

Sensor SWR: Ajustar en el sensor el diámetro del cable antes de instalarlo.

SWR sensor: *Adjust the rope diameter in the sensor before the assembly.*

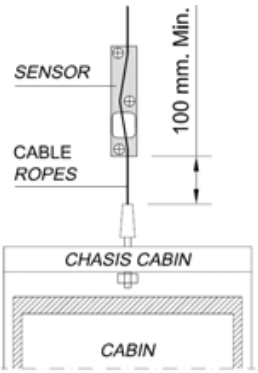

SUSPENSION 1:1

Roping 1:1

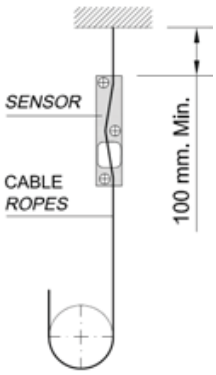

SUSPENSION 2:1

Roping 2:1

MUY IMPORTANTE / *WARNING*

Al realizar el montaje del sensor, la llave **nunca** debe sujetar al sensor por el lado del cable (ver foto).

When perform the sensor assembly, the tool ***should not*** *hold the sensor on the sensor cable side (See photo).*

Montaje CORRECTO
CORRECT Assembly

Montaje INCORRECTO
WRONG Assembly

Elevator Systems, Inc. ~ 465 Endo Blvd, Garden City, New York 11530
516-239-4044 (voice) ~ 516-239-5793 (fax)